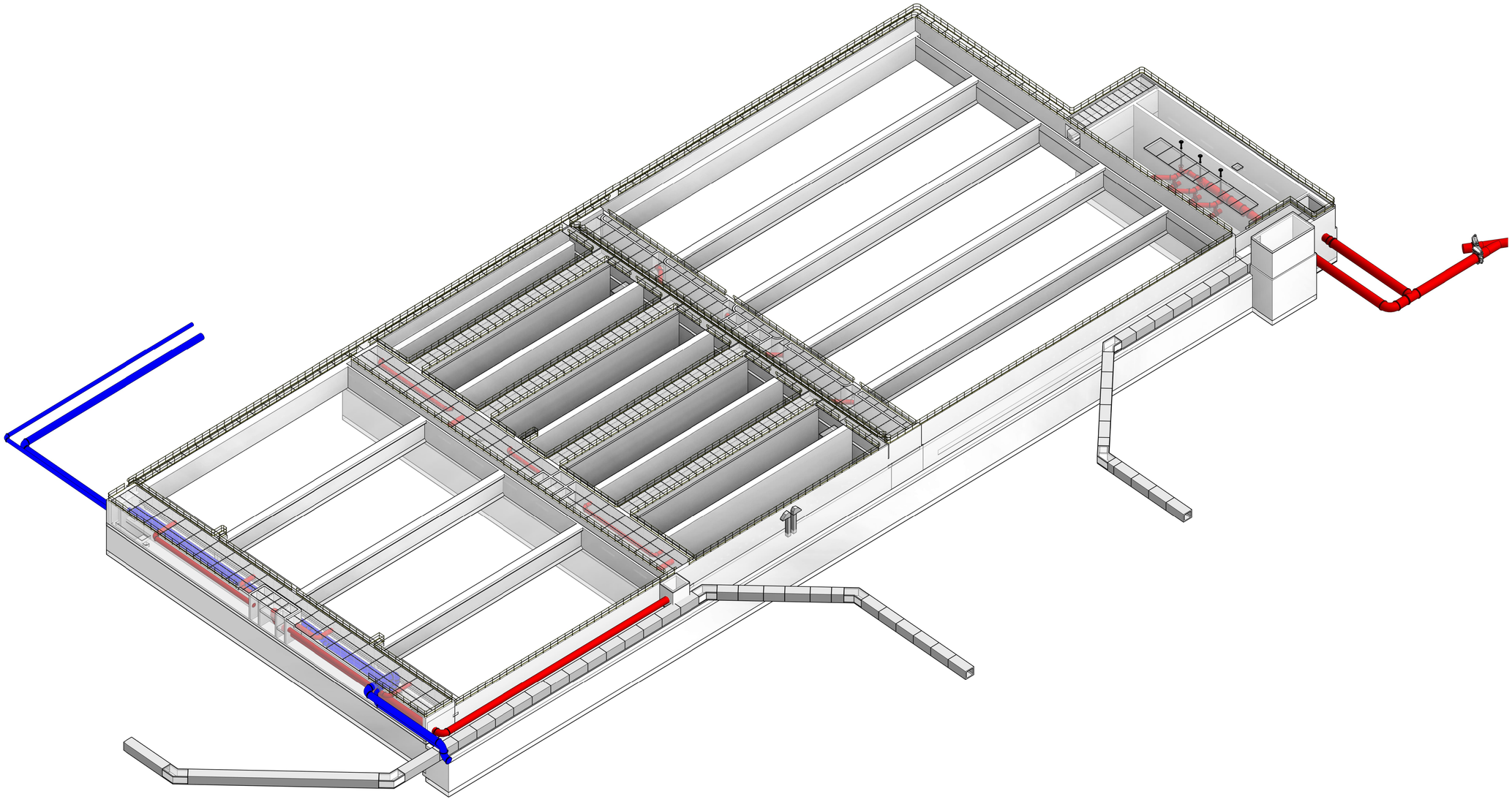

3D VIEW OF CAS TANK

© Copyright
This drawing and any design here on is the copyright of the Consultants and must not be reproduced without their written consent.
All drawings remain the property of the Consultants.

THIS DRAWING TO BE READ IN CONJUNCTION WITH ALL RELEVANT ARCHITECTS AND ENGINEERS DRAWINGS.

FIGURED DIMENSIONS ONLY TO BE TAKEN FROM THIS DRAWING.

ALL LEVELS ARE IN METRES AND RELATE TO DATUM AT MALIN HEAD.

THIS DRAWING IS REPRODUCED FROM DIGITAL MAPS:
O.S. MAPS - Scale 1:2,500
O.S. MAPS - Scale 1:1,000
DISCOVERY SERIES - Scale 1:50,000

ALL MAPS ARE REFERENCED TO IRISH NATIONAL GRID (I.T.M.)

REPRODUCED FROM THE ORDNANCE SURVEY OF IRELAND BY PERMISSION OF THE GOVERNMENT. LICENSE NO. EN 0083316.

THIS DRAWING IS A COPY OF AN ELECTRONIC FILE AND IS COPYRIGHT.

ALL DIMENSIONS TO BE CHECKED ON SITE.

ALL MATERIALS AND WORKMANSHIP TO BE IN ACCORDANCE WITH ENGINEERS SPECIFICATION.

IT IS THE CONTRACTORS RESPONSIBILITY TO VERIFY ALL DIMENSIONS AND LEVELS PRIOR TO COMMENCEMENT OF CONSTRUCTION.

Rev:	Suit:	Revision Description	Checked:	Date:
C01	A1	ISSUED FOR PLANNING	PJ	30-04-26

Client:

Uisce Éireann
Colvill House
24-26 Talbot Street
Dublin 1
Tel: 1890 278 278
Int:353-1-707 2828
email: info@water.ie
Web: www.water.ie

Consultant:

info.ireland@egis-group-com
Formerly JB Barry & Partners who became part of Egis in 2023

Project:

LIMERICK WWTP UPGRADE & REGIONAL BIORESOURCE CENTRE

Drawing Title:

PROPOSED RISING MAIN DIVERSION THROUGH EXISTING CAS TANK 3D VIEW

Drawn By:	LHA	Date:	07/09/23
Checked By:	ML	Date:	07/09/23
Approved by:	PJ	Date:	07/09/23

Internal Project REFS : EEI: 20702

Scales :

Stage : PLANNING

Drawing No:	Sheet No:	Revision:	Suitability:
20702-EEI-00-XX-DR-Z-	01225	C01	A1

C:\Users\i.appenah\OneDrive - EGIS Group\Documents\LMD WWTP FED MODEL\REVIT AUGUST 2026\20702-EEI-00-XX-DR-Z-01223_01226-Existing CAS Tanks.rvt